50' BeltVeyor

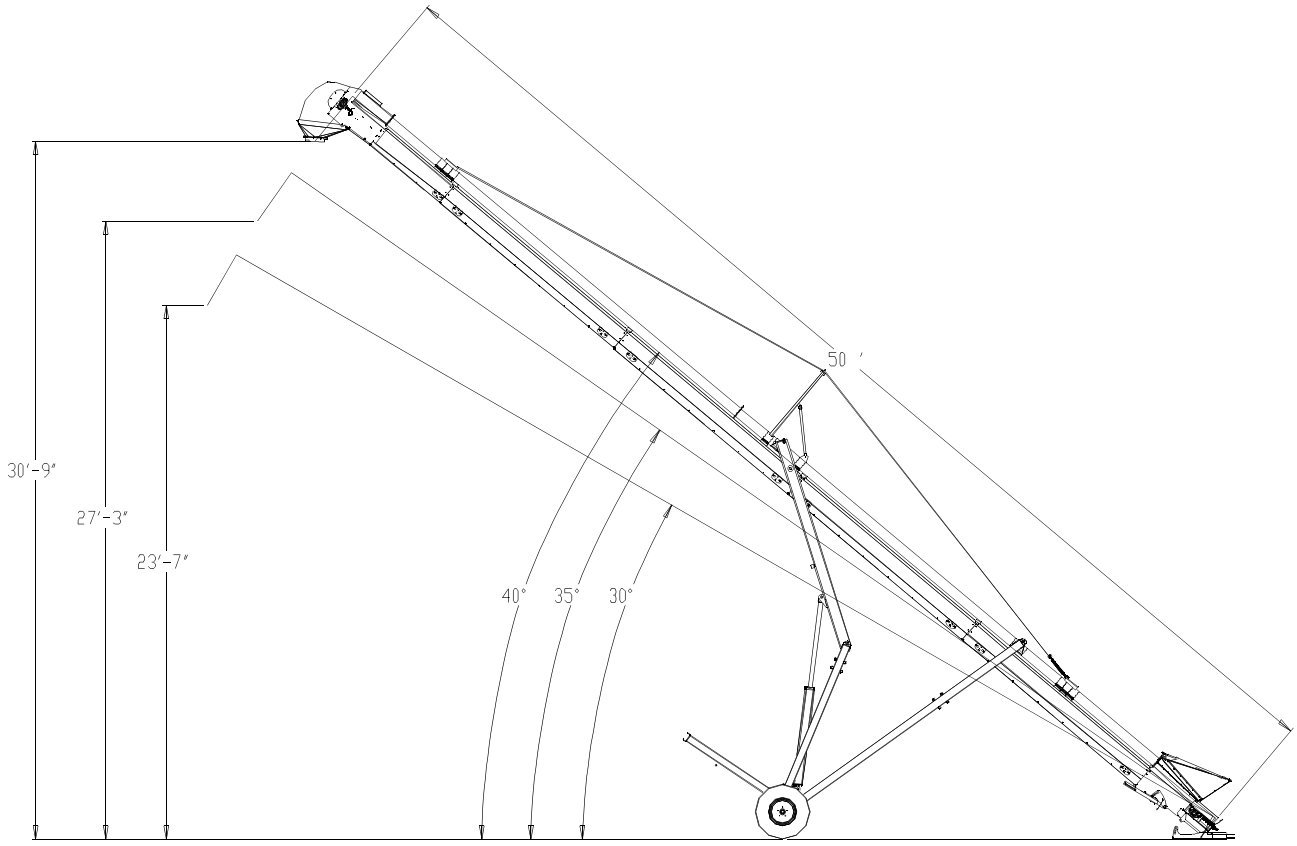

50'-16" Honeycomb Belt				50'-16" Crescent Belt			
ft/min	angle	bu/hr	hp	ft/min	angle	bu/hr	hp
380	30	3000	11.0	380	27	2700	10.0
380	35	2750	11.4				
380	40	2500	11.9				
457	30	3499	12.0	457	27	3000	12.1
457	35	3207	12.5				
457	40	2916	13.0				
578	30	4254	13.5	576	27	3410	12.6
578	35	3899	14.1				
578	40	3545	14.7				
706	30	5052	15.2	706	27	3750	14.3
706	35	4631	15.8				
706	40	4210	16.5				
858	30	6000	16.8	858	27	4000	15.0
858	35	5500	17.5				
858	40	5000	18.2				

All bu/hr was done with 60 lb/bu wheat @ 12%-15% moisture

Undercarriage -	hydraulic	
Available drives -	Electric	
	PTO	
Electric -	20 hp minimum	
	Use 3 phase @1800 RPM	
PTO -	Use 540 PTO	
Drive Type -	Head drive jack-shaft style	
Belt -	16" Honeycomb cleat	
	16" crescent	
Maximum angle -	Crescent	27 degrees
	Honeycomb	40 plus degrees

Operations above recommended angle WILL result in damage to unit.

50' BeltVeyor - Electric
Head, Tail and Pan

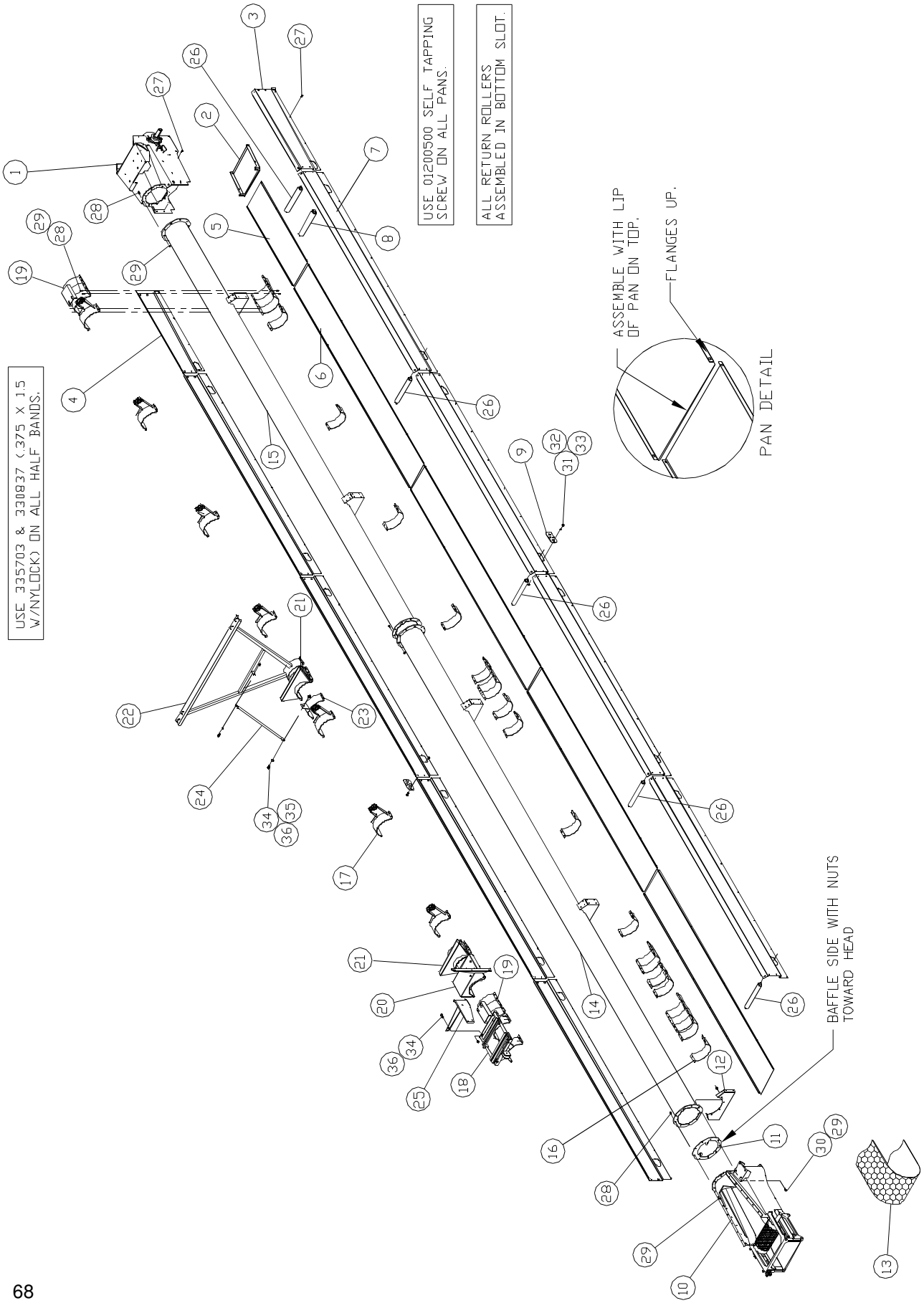

50' BeltVeyor - Electric
Head, Tail and Pan

Dimensions from end of tube to half bands.

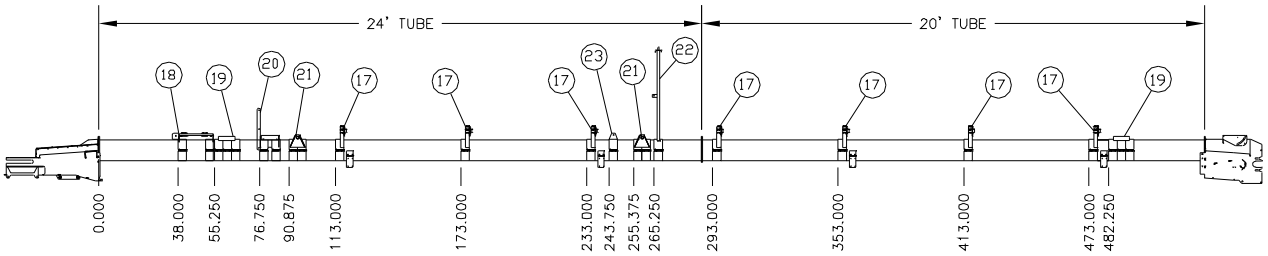

#63061600

Item	Qty	Part No.	Description
1	1	63086300	Head Assembly -10" Roller
2	1	30720700	Head Pan
3	1	30719900	Pan Side 4' Right
4	1	30161400	Pan Side 4' Left
5	1	30162200	Pan 4'
6	4	30164800	Pan 10'
7	8	30163000	Pan Side 10'
8	1	60196300	Plastic Roller 2 3/8"
9	18	30328900	Roller Slot Cover
10	1	62951900	Tail Assembly
11	1	82762600	Baffle
12	1	30731400	Tail Mount
13	1	63063200	Honeycomb Belt 16" x 98'-11"
14	1	82716200	Tube 10" x 24'
15	1	82717000	Tube 10" x 20'
16	23	10319210	Half Band 4 x 10
17	7	63085500	Bearing Mount Assembly
18	1	81879900	Electric Motor Mount
19	2	82737800	Cable Mount
20	1	82729500	Gear Box Mount
21	2	82907700	Axle Mount
22	1	82739400	Truss Long
23	1	82742800	Truss Brace
24	1	17122300	Truss Arm
25	1	30222400	Tail Guard Bracket
26	5	63104400	Plastic Roller 2"
27	140	01200500	Screw 5/16 x 3/4 Washer Head Self-Tap
28	117	335703	HHCS 3/8 x 1½"
29	119	330837	Nylock 3/8
30	2	332890	Carriage Bolt 3/8" x 1 3/4"
31	36	337949	Carriage Bolt 1/4 x 3/4"
32	36	02016400	Flat Washer 1/4"
33	36	330522	Nylock 1/4"
34	4	01180900	HHCS ½" x 1 1/4"
35	2	330159	Flat Washer ½"
36	4	331363	Nylock ½"

50' BeltVeyor - Electric
Conveyor Parts

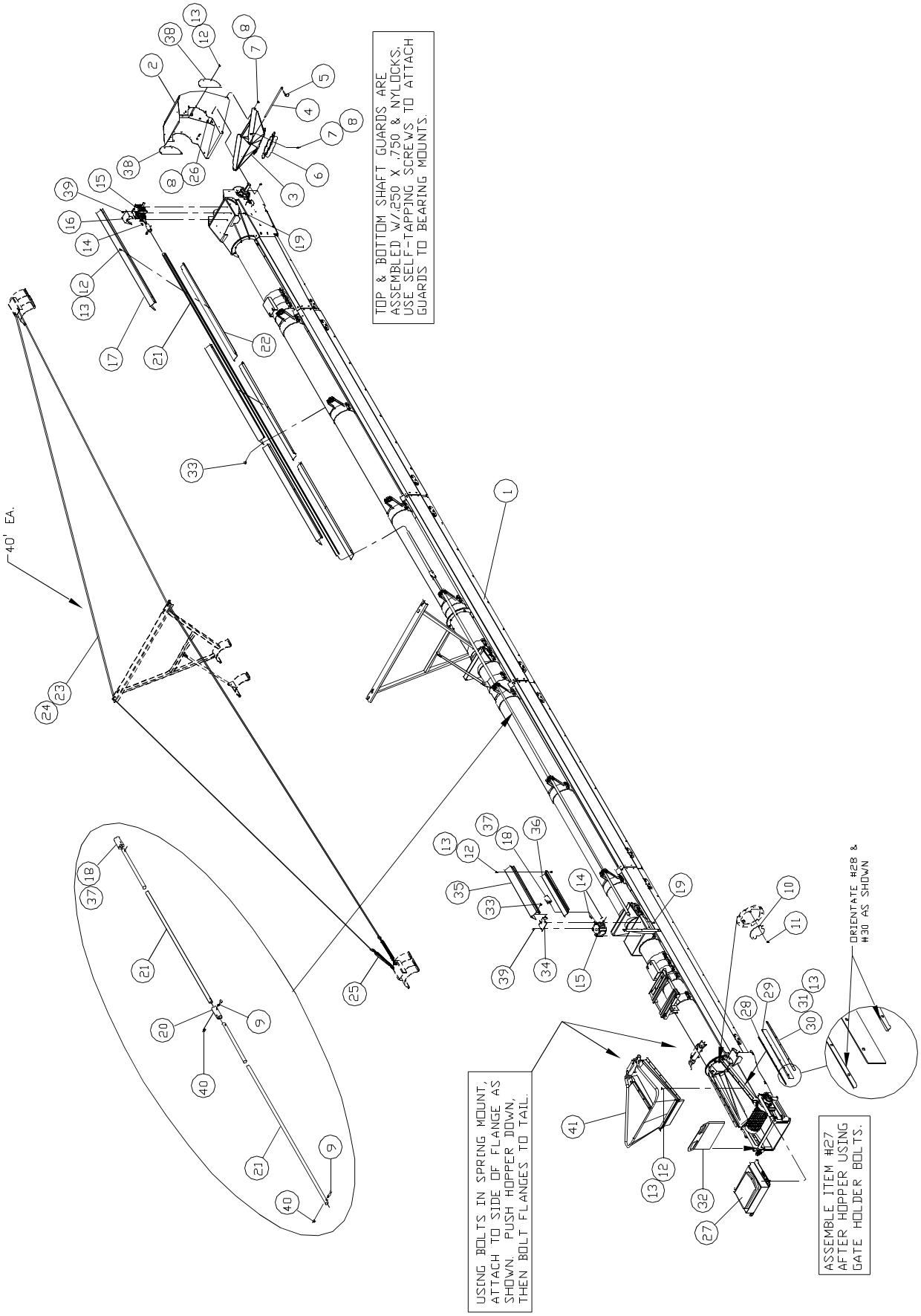

50' BeltVeyor - Electric
Conveyor Parts

#63062400

Item	Qty	Part No.	Description
1	1	63061600	Head-Tail-Tube Assembly
2	1	63022800	Spout Top w/lining
3	1	82779000	Spout Bottom -10" Round
4	1	30302400	Spout Pin
5	2	330928	Klik Pin 3/16"
6	1	82791500	10" Spout Tube
7	11	01145200	HHCS 3/8 x 3/4"
8	17	330837	Nylock 3/8"
9	4	331926	HHCS ½" x 2"
10	1	30337000	Baffle Plate
11	2	01017300	HHCS 3/8" x 1"
12	68	01057900	HHCS 1/4" x 3/4"
13	82	330522	Nylock 1/4"
14	3	10490100	Key 1/4 x 1 1/4"
15	2	04007100	Gear Box
16	1	30213300	Head Guard Mount
17	7	30200000	Shaft Guard Top Long
18	2	30202600	Sleeve w/keyway
19	8	01010800	HHCS 5/16" x 1"
20	1	30203400	Shaft Sleeve
21	2	30592000	Drive Shaft
22	7	30199400	Shaft Guard Bottom Long
23	80'	01506500	Cable 3/8 x 19
24	8	01502400	Cable Clamp 3/8
25	2	04151700	Turnbuckle 5/8" x 9
26	6	330654	Carriage Bolt 3/8 x 1"
27	1	62956800	Belt Cover & Brush
28	2	30158000	Inner Skirtboard
29	2	30157200	Nylon Skirtboard
30	2	30159800	Outer Skirtboard
31	14	333633	HHCS 1/4 x 1 1/4"
32	1	30204200	Tail Door
33	64	01200500	Screw 5/16 x 3/4 Washer Head Self-Tap
34	1	30212500	Tail Guard Mount
35	1	30373500	Shaft Guard Top Short
36	1	30374300	Shaft Guard Bottom Short
37	2	337758	Set Screw 1/4-20 x 1/4"
38	2	30721500	Spout Guard
39	4	01144500	HHCS 5/16" x 3/4"
40	4	331363	Nylock ½"
41	1	62997200	Flex Hopper Assembly

50' BeltVeyor - Electric
Drive and Undercarriage

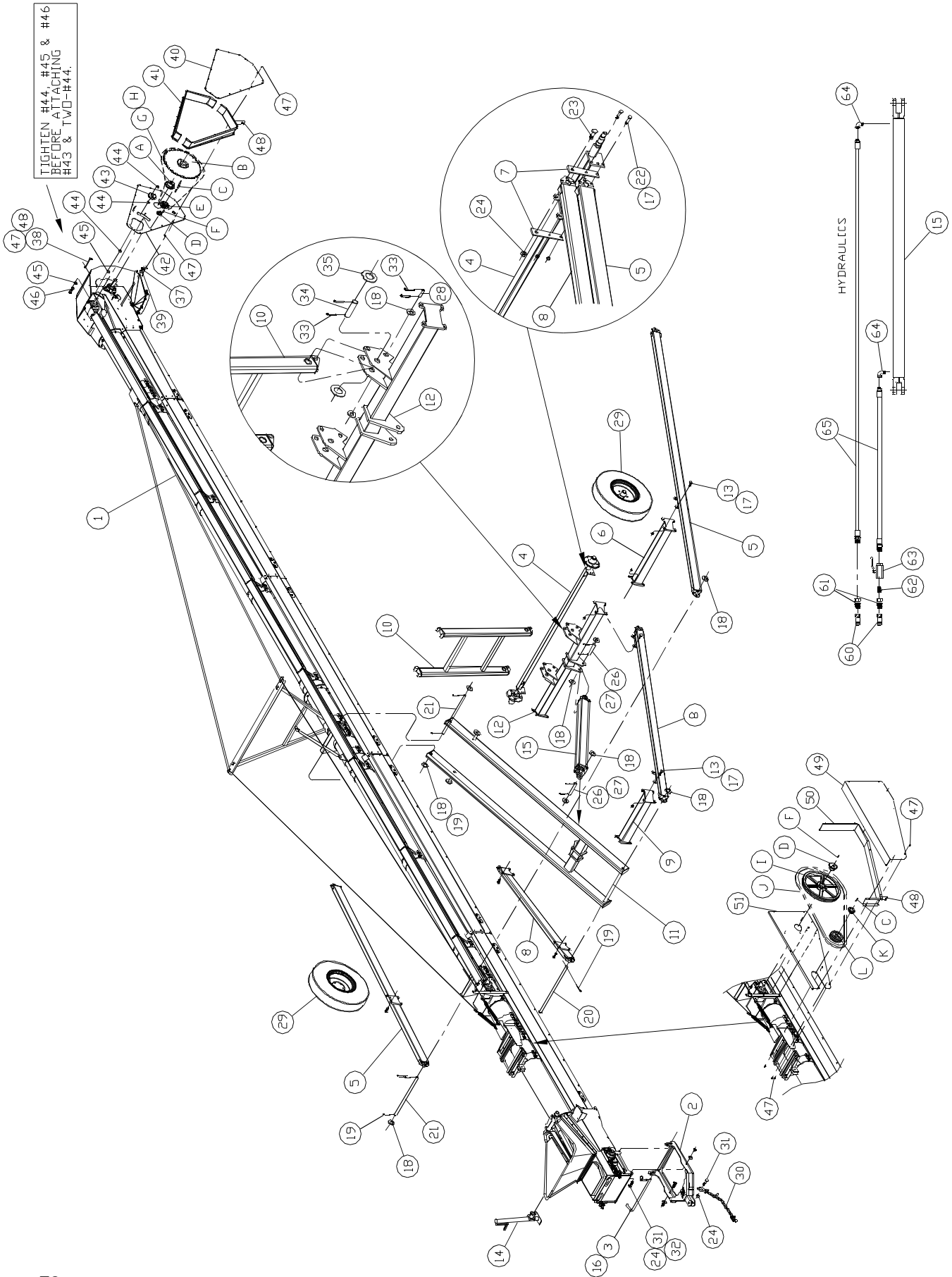

50' BeltVeyor - Electric
Drive and Undercarriage

#90887100

Item	Qty	Part No.	Description
1	1	63062400	Conveyor Assembly
2	1	82745100	Pivot Hitch
3	1	30243000	Pivot Hitch Handle
4	1	71022800	Axle & Hub Assembly
5	2	82823600	Axle Arm
6	1	82847500	Axle Arm Cross Brace
7	4	15999600	Axle Bracket
8	2	82850900	Lower Lift Arm
9	1	82824400	Upper Cross Brace
10	1	82828500	Upright
11	1	82846700	Upper Lift Arm
12	1	82822800	Lower Cylinder Bar
13	24	01140300	Carriage Bolt ½" x 2"
14	1	531558	Jack 20,000# Side Crank Bottom Mount
15	1	466953	Hydraulic Cylinder 4 x 48
16	1	330928	Klik Pin 3/16"
17	28	331363	Nylock ½"
18	18	330407	Flat Washer 1"
19	5	336081	Cotter Pin 1/4 x 3"
20	1	82825100	Pivot Pin
21	2	30764500	Axle Arm Shaft
22	4	335422	HHCS ½" x 2½"
23	2	335174	HHCS 3/4" x 2½"
24	5	330316	Nylock 3/4"
25			
26	2	14288500	Pin 1" x 5 1/8"
27	4	02154300	Cotter Pin 5/32" x 1 3/4"
28	2	18972000	Pin 1" x 4 3/4"
29	2	807313	Tire & Rim 9.5L x 15 6Ply 5 bolt rim
30	1	433938	Safety Chain 11,000#
31	3	02307700	HHCS 3/4" x 3"
32	2	330340	Flat Washer 3/4"
33	6	02288900	Cotter Pin 3/16" x 2"
34	2	14402200	Pin 1 1/4" x 4 3/4"
35	4	330415	Flat Washer 1 1/4"
36	2	330597	Nylock 1"
37	2	01200500	Screw 5/16 x 3/4" Washer Head Self Tap
38	1	30732200	Head Guard Bracket Top
39	1	30331300	Head Guard Bracket Side
40	1	30197800	Guard Cover
41	2	30198600	Guard Side
42	1	30196000	Guard Back Plate
43	1	04074100	Idler Sprocket #80-12T
44	3	330571	Hex Nut 5/8"
45	2	330183	Flat Washer 5/8"
46	1	04121000	HHCS 5/8" x 3"
47	64	01057900	HHCS 1/4" x 3/4"
48	64	330522	Nylock 1/4"
49	1	30211700	Sheave Guard Cover
50	1	30218200	Tail Guard Side
51	1	30221600	Tail Guard Back Plate
60	2	465385	Coupler Male ¾ FOR
61	2	466912	Adapter Straight ¾ MOR / ½ NPTF
62	1	00627000	Adapter Straight ½ NPTM / ½ NPTM
63	1	03227600	Hyd. Ball Valve ½ NPTF
64	2	463513	Adapter 90° -Restrictor ½ NPTM / ⅜ NPTF Sw
65	2	61471900	Hose ⅜ x 720" ½ NPTM / ⅜ NPTM

50' Electric Drive Options

Description	#63079800 380 FPM	#63009500 457 FPM	#63010300 578 FPM	#63014500 706 FPM	#63081400 858 FPM
A- Bushing	00730200	00730200	00730200	00730200	00730200
B- Sprocket	03163300	03163300	03163300	01304500	01304500
C- Key	20072500	20072500	20072500	20072500	20072500
D- Bushing	04332300	04332300	04332300	04332300	04332300
E- Sprocket	01303700	01303700	01303700	01303700	01303700
F- Key	10490100	10490100	10490100	10490100	10490100
G- Chain	30333900	30333900	30333900	30334700	30334700
H- Connector	00232900	00232900	00232900	00232900	00232900
I- Sheave	04285300	04285300	04285300	04285300	04285300
J- V-Belt	03578200	03562600	01014000	03578200	03562600
K- Bushing	04322400	04322400	01855600	04322400	04322400
L- Sheave	04371100	04303400	04425500	04371100	04303400

50' BeltVeyor - PTO
Head,Tail, and Pan

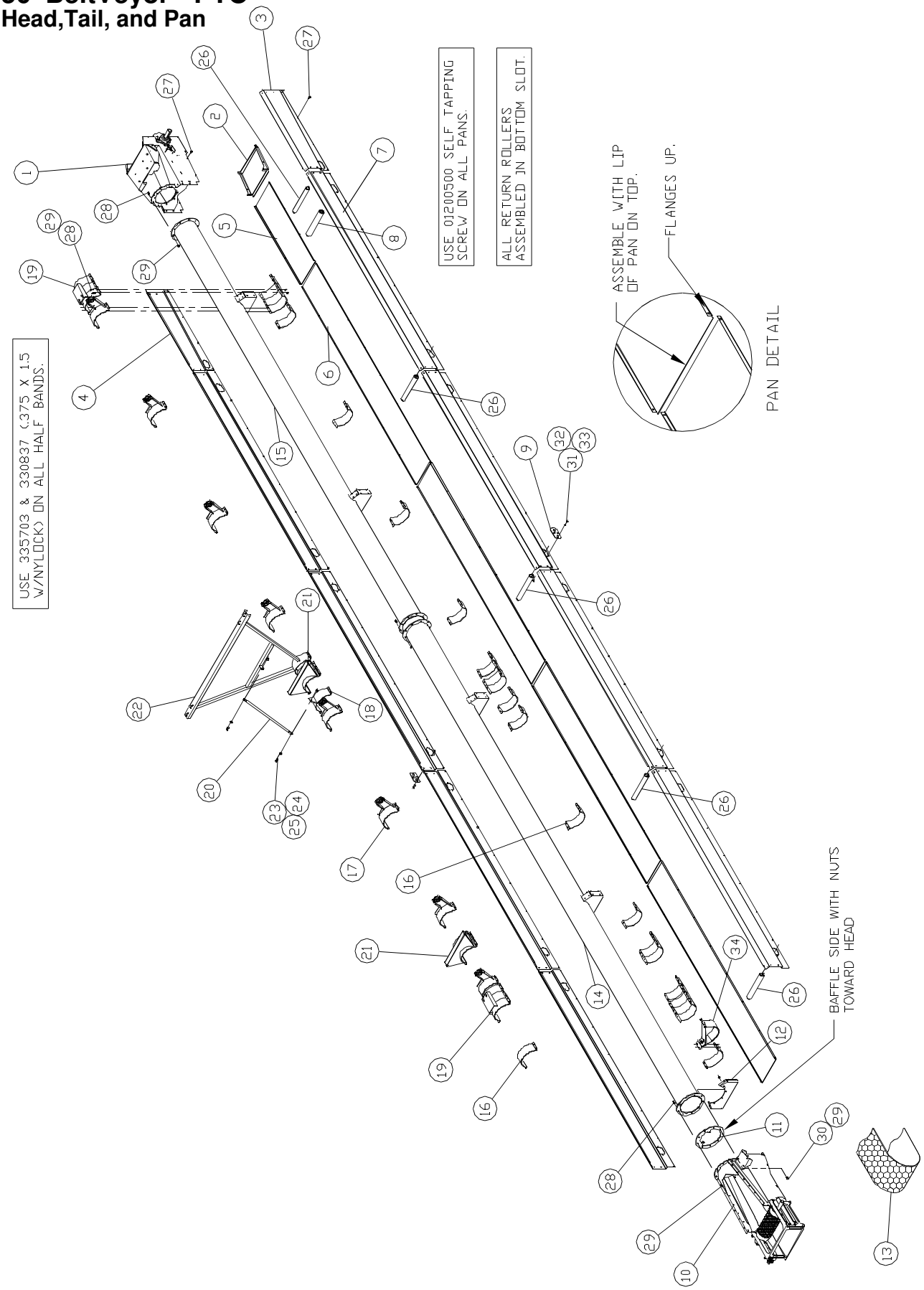

50' BeltVeyor - PTO
Head, Tail and Pan

Dimensions from end of tube to half bands.

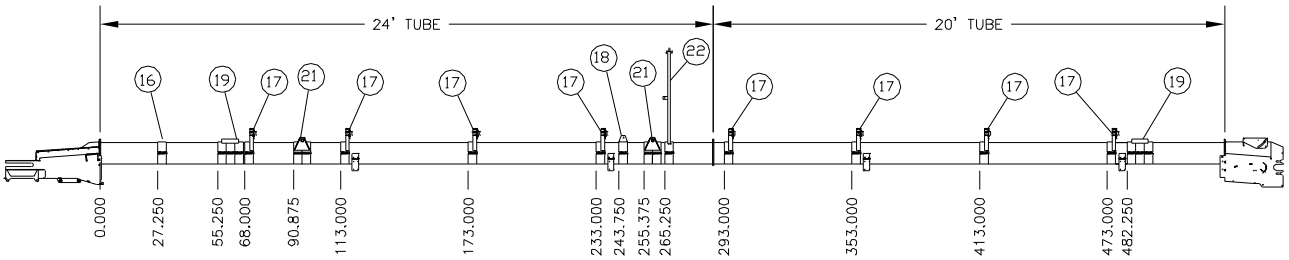

#63111900

Item	Qty	Part No.	Description
1	1	63086300	Head Assembly -10" Roller
2	1	30720700	Head Pan
3	1	30719900	Pan Side 4' Right
4	1	30161400	Pan Side 4' Left
5	1	30162200	Pan 4'
6	4	30164800	Pan 10'
7	8	30163000	Pan Side 10'
8	1	60196300	Plastic Roller 2 3/8"
9	18	30328900	Roller Slot Cover
10	1	62951900	Tail Assembly
11	1	82762600	Baffle
12	1	30731400	Tail Mount
13	1	63063200	Honeycomb Belt 16" x 98'-11"
14	1	82716200	Tube 10" x 24'
15	1	82717000	Tube 10" x 20'
16	22	10319210	Half Band 4 x 10
17	8	63085500	Bearing Mount Assembly
18	1	82742800	Truss Brace
19	2	82737800	Cable Mount
20	1	17122300	Truss Arm
21	2	82907700	Axle Mount
22	1	82739400	Truss Long
23	2	01180900	HHCS ½" x 1 1/4"
24	2	330159	Flat Washer ½"
25	2	331363	Nylock ½"
26	5	63104400	Plastic Roller 2"
27	140	01200500	Screw 5/16 x 3/4 Washer Head Self-Tap
28	109	335703	HHCS 3/8 x 1½"
29	111	330837	Nylock 3/8"
30	2	332890	Carriage Bolt 3/8" x 1 3/4"
31	36	337949	Carriage Bolt 1/4 x 3/4"
32	36	02016400	Flat Washer 1/4"
33	36	330522	Nylock 1/4"
34	1	62056700	PTO Shaft Carrier

50' Beltveyor - PTO
Conveyor Parts

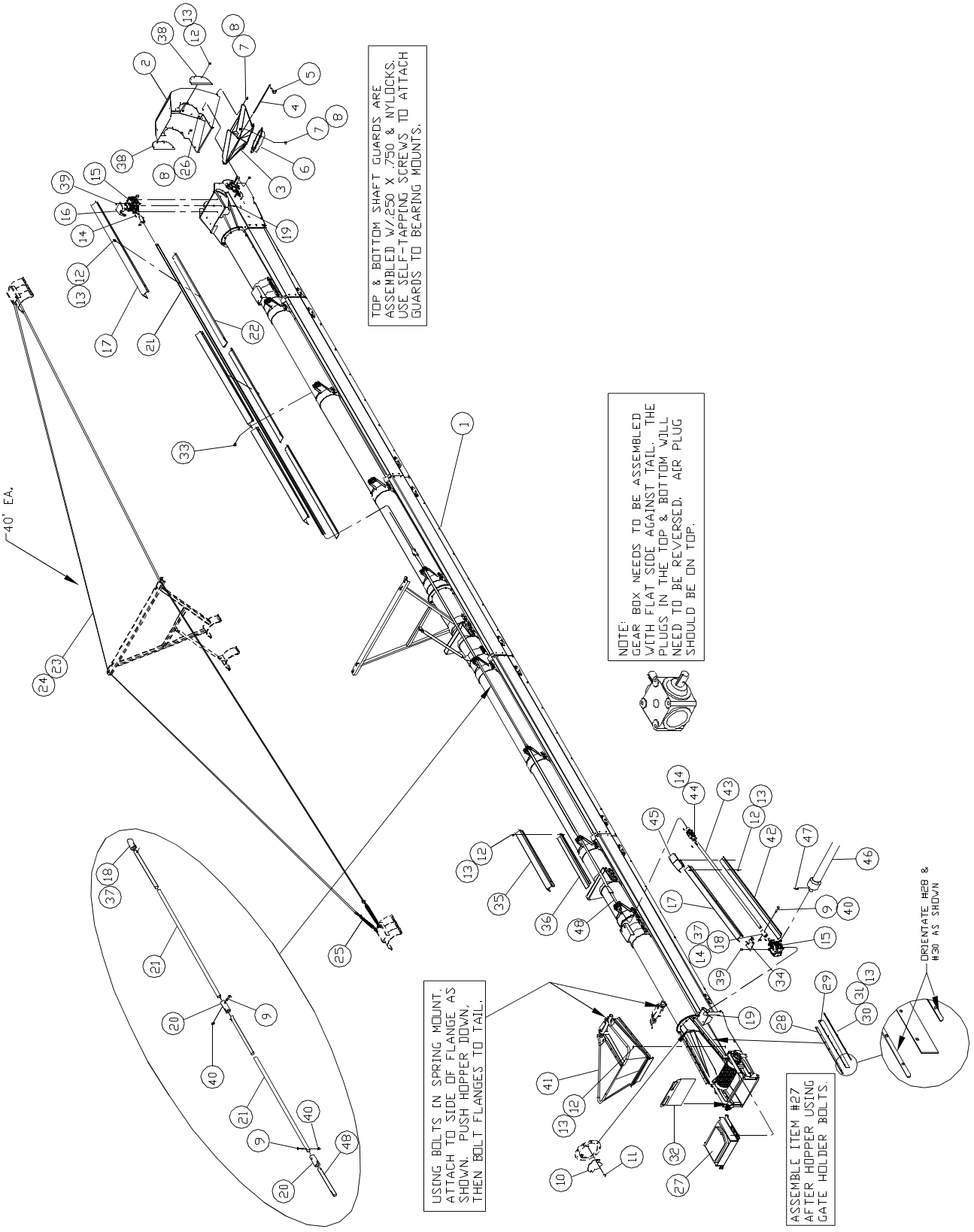

50' BeltVeyor - PTO
Conveyor Parts

#63112700

Item	Qty	Part No.	Description
1	1	63111900	Head-Tail-Tube Assembly
2	1	63022800	Spout Top w/lining
3	1	82779000	Spout Bottom -10" Round
4	1	30302400	Spout Pin
5	2	330928	Klik Pin 3/16"
6	1	82791500	10" Spout Tube
7	11	01145200	HHCS 3/8 x 3/4"
8	17	330837	Nylock 3/8"
9	6	331926	HHCS ½" x 2"
10	1	30337000	Baffle Plate
11	2	01017300	HHCS 3/8" x 1"
12	66	01057900	HHCS 1/4" x 3/4"
13	80	330522	Nylock 1/4"
14	3	10490100	Key 1/4 x 1 1/4"
15	2	04007100	Gear Box
16	1	30213300	Head Guard Mount
17	8	30200000	Shaft Guard Top Long
18	2	30202600	Sleeve w/keyway
19	8	01010800	HHCS 5/16" x 1"
20	2	30203400	Shaft Sleeve
21	2	30592000	Drive Shaft
22	7	30199400	Shaft Guard Bottom Long
23	80'	01506500	Cable 3/8 x 19
24	8	01502400	Cable Clamp 3/8
25	2	04151700	Turnbuckle 5/8" x 9
26	6	330654	Carriage Bolt 3/8 x 1"
27	1	62956800	Belt Cover & Brush
28	2	30158000	Inner Skirtboard
29	2	30157200	Nylon Skirtboard
30	2	30159800	Outer Skirtboard
31	14	333633	HHCS 1/4 x 1 1/4"
32	1	30204200	Tail Door
33	56	01200500	Screw 5/16 x 3/4 Washer Head Self-Tap
34	1	30212500	Tail Guard Mount
35	1	30476600	Shaft Guard Top Short
36	1	30475800	Shaft Guard Bottom Short
37	2	337758	Set Screw 1/4-20 x 1/4"
38	2	30721500	Spout Guard
39	4	01144500	HHCS 5/16" x 3/4"
40	6	331363	Nylock ½"
41	1	62997200	Flex Hopper Assembly
42	1	30477400	Shaft Guard -Bottom Drive
43	1	30472500	Shaft -Bottom Drive
44	1	04120200	U-Joint 12N 1 1/4 x 1 1/4 Round
45	1	30474100	Guard Splice
46	1	06273700	PTO Shaft
47	1	08993800	Roll Pin 1/4" x 2"
48	1	30473300	Keyed Shaft

50' Beltveyor - PTO
Drive and Undercarriage

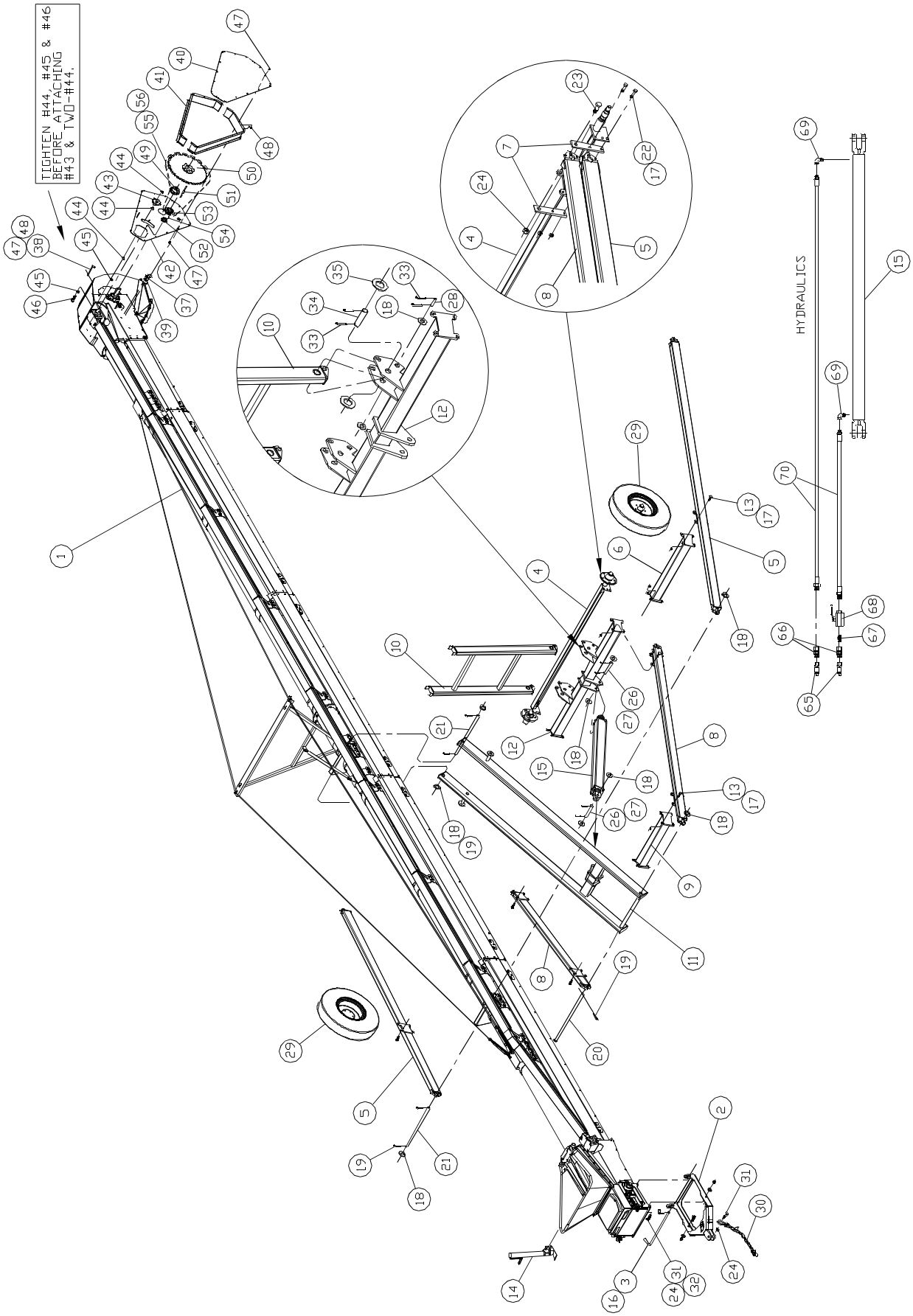

50' BeltVeyor - PTO
Drive and Undercarriage

#90899600

Item	Qty	Part No.	Description
1	1	63112700	Conveyor Assembly
2	1	82745100	Pivot Hitch
3	1	30243000	Pivot Hitch Handle
4	1	71022800	Axle & Hub Assembly
5	2	82823600	Axle Arm
6	1	82847500	Axle Arm Cross Brace
7	4	15999600	Axle Bracket
8	2	82850900	Lower Lift Arm
9	1	82824400	Upper Cross Brace
10	1	82828500	Upright
11	1	82846700	Upper Lift Arm
12	1	82822800	Lower Cylinder Bar
13	24	01140300	Carriage Bolt ½" x 2"
14	1	531558	Jack 20,000# Side Crank Bottom Mount
15	1	466953	Hydraulic Cylinder 4 x 48
16	1	330928	Klik Pin 3/16"
17	28	331363	Nylock ½"
18	15	330407	Flat Washer 1"
19	5	336081	Cotter Pin 1/4 x 3"
20	1	82825100	Pivot Pin
21	2	30764500	Axle Arm Shaft
22	4	335422	HHCS ½" x 2½"
23	2	335174	HHCS 3/4" x 2½"
24	5	330316	Nylock 3/4"
25			
26	2	14288500	Pin 1" x 5 1/8"
27	4	02154300	Cotter Pin 5/32" x 1 3/4"
28	2	18972000	Pin 1" x 4 3/4"
29	2	807313	Tire & Rim 9.5L x 15 6Ply 5 bolt rim
30	1	433938	Safety Chain 11,000#
31	3	02307700	HHCS 3/4" x 3"
32	2	330340	Flat Washer 3/4"
33	6	02288900	Cotter Pin 3/16" x 2"
34	2	14402200	Pin 1 1/4" x 4 3/4"
35	4	330415	Flat Washer 1 1/4"
36	2	330597	Nylock 1"
37	2	01200500	Screw 5/16 x 3/4" Washer Head Self Tap
38	1	30732200	Head Guard Bracket Top
39	1	30331300	Head Guard Bracket Side
40	1	30197800	Guard Cover
41	2	30198600	Guard Side
42	1	30196000	Guard Back Plate
43	1	04074100	Idler Sprocket #80-12T
44	3	330571	Hex Nut 5/8"
45	2	330183	Flat Washer 5/8"
46	1	04121000	HHCS 5/8" x 3"
47	41	01057900	HHCS 1/4" x 3/4"
48	41	330522	Nylock 1/4"
49	1	00730200	Bushing 1½" SF QD
50	1	01420900	Sprocket #80 26T SF
51	3	20072500	Key 3/8" x 2"
52	1	04332300	Bushing 1" SK
53	1	01303700	Sprocket #80 15T SK
54	4	10490100	Key 1/4" x 1 1/4"
55	1	14498000	Chain #80 x 60P
56	1	00232900	Chain #80 Connector
65	2	465385	Coupler Male ¾ FOR
66	2	466912	Adapter Straight ¾ MOR / ½ NPTF
67	1	00627000	Adapter Straight ½ NPTM / ½ NPTM
68	1	03227600	Hyd. Ball Valve ½ NPTF
69	2	463513	Adapter 90° -Restrictor ½ NPTM / ⅜ NPTF Sw
70	2	61471900	Hose ⅜ x 720" ½ NPTM / ⅜ NPTM